Ship 21-10

Work Order ID 63086

October 20, 2010 3:10:12 PM

Item ID: D3891-042 **Accept** **Setup Start** **Stop**

Revision ID:

Item Name: Panel, Fwd RH

Start Date: 10/20/10 **Start Qty:** 2.00 **Cust Item ID:**

Required Date: 10/21/10 **Req'd Qty:** 2.00 **Customer:**

Reference:

Approvals: **Process Plan:** R **Date:** 10-10-20 **Tooling:** **Date:** **Run Start** **Stop**

QC: **Date:** **SPC (Y/N):** **Date:**

Sequence ID/ Work Center ID	Operation Description	Set Up/ Run Hours	Tool ID	Tool #	Plan Code	Accept Qty	Reject Qty	Reject Number	Insp. Stamp
Draw Nbr	**Revision Nbr**								
D3891	A								
100		0.00							
Waterjet	**Memo**	0.00				AB 10-10-20			
FLOW CNC Waterjet	1-Cut as per Dwg D3891-2 Dwg Rev: A Prog Rev: A 2-Deburr if necessary								
110	QC2- Inspect parts off machine FAI/FAIB	0.00							
QC	**Memo**	0.00				AB 10-10-20			
Quality Control									

2

Dart Aerospace Ltd

W/O:		WORK ORDER CHANGES					
DATE	STEP	PROCEDURE CHANGE	By	Date	Qty	Approval Chief Eng / Prod Mgr	Approval QC Inspector

Part No: _____ **PAR #:** _____ **Fault Category:** _____ **NCR:** Yes No **DQA:** _____ **Date:** _____

Resolution: _____ **Disposition:** _____ **QA: N/C Closed:** _____ **Date:** _____

NCR:		WORK ORDER NON-CONFORMANCE (NCR)						
DATE	STEP	Description of NC Section A	Corrective Action Section B			Verification Section C	Approval Chief Eng	Approval QC Inspector
			Initial Chief Eng	Action Description Chief Eng	Sign & Date			

NOTE: Date & initial all entries

H:\fFORMS\Quality Assurance\approved QA\NCRWO RevE

Work Order ID 63086

October 20, 2010 3:10:12 PM

Item ID: D3891-042 **Accept** **Setup Start**

Revision ID: **Stop**

Item Name: Panel, Fwd RH

Start Date: 10/20/10 **Start Qty:** 2.00 **Cust Item ID:**

Required Date: 10/21/10 **Req'd Qty:** 2.00 **Customer:**

Reference:

Approvals: **Process Plan:** _____ **Date:** _____ **Tooling:** _____ **Date:** _____ **Run Start**

QC: _____ **Date:** _____ **SPC (Y/N):** _____ **Date:** _____ **Stop**

Sequence ID/ Work Center ID	Operation Description	Set Up/ Run Hours	Tool ID	Tool #	Plan Code	Accept Qty	Reject Qty	Reject Number	Insp. Stamp
120	QC8- Inspect parts - second check	0.00				2			101021
QC	Memo	0.00							
Quality Control									
130		0.00				2x			
Small Fab	Memo	0.00							
Small Fab	Deburr if necessary								
140	Pick Kit	0.00				2x			
Packaging	Memo	0.00							
Packaging									

=7 m-f 10/10/21

=7 m-f 10/10/21

Dart Aerospace Ltd

W/O:		WORK ORDER CHANGES					
DATE	STEP	PROCEDURE CHANGE	By	Date	Qty	Approval Chief Eng / Prod Mgr	Approval QC Inspector

Part No: _____ **PAR #:** _____ **Fault Category:** _____ **NCR:** Yes No **DQA:** _____ **Date:** _____

Resolution: _____ **Disposition:** _____ **QA: N/C Closed:** _____ **Date:** _____

NCR:		WORK ORDER NON-CONFORMANCE (NCR)						
DATE	STEP	Description of NC Section A	Corrective Action Section B			Verification Section C	Approval Chief Eng	Approval QC Inspector
			Initial Chief Eng	Action Description Chief Eng	Sign & Date			

NOTE: Date & initial all entries

H:\fFORMS\Quality Assurance\approved QA\NCRWO RevE

Work Order ID 63086

October 20, 2010 3:10:13 PM

Item ID: D3891-042 **Accept** **Setup Start**

Revision ID: **Stop**

Item Name: Panel, Fwd RH

Start Date: 10/20/10 **Start Qty:** 2.00 **Cust Item ID:**

Required Date: 10/21/10 **Req'd Qty:** 2.00 **Customer:**

Reference:

Run Start

Approvals: **Process Plan:** _____ **Date:** _____ **Tooling:** _____ **Date:** _____

Stop

QC: _____ **Date:** _____ **SPC (Y/N):** _____ **Date:** _____

Sequence ID/ Work Center ID	Operation Description	Set Up/ Run Hours	Tool ID	Tool #	Plan Code	Accept Qty	Reject Qty	Reject Number	Insp. Stamp
150		0.00				2x			
Small Fab	**Memo**	0.00							
Small Fab	1- Bond gasket to smooth side of panel as per dwg A/R 3M 1300 adhesive Batch: 115230 => MR 10/10/21								
160	QC5- Inspect part completeness to step on W/O	0.00				2			10/10/21
QC	**Memo**	0.00							
Quality Control									
170	Identify as per dwg & Stock Location: PDP	0.00							
Packaging	**Memo**	63082 0.00 1/0 63112 1/0							
Packaging									

Dart Aerospace Ltd

W/O:		WORK ORDER CHANGES					
DATE	STEP	PROCEDURE CHANGE	By	Date	Qty	Approval Chief Eng / Prod Mgr	Approval QC Inspector

Part No: _____ **PAR #:** _____ **Fault Category:** _____ **NCR:** Yes No **DQA:** _____ **Date:** _____

Resolution: _____ **Disposition:** _____ **QA: N/C Closed:** _____ **Date:** _____

NCR:		WORK ORDER NON-CONFORMANCE (NCR)						
DATE	STEP	Description of NC Section A	Corrective Action Section B			Verification Section C	Approval Chief Eng	Approval QC Inspector
			Initial Chief Eng	Action Description Chief Eng	Sign & Date			

NOTE: Date & initial all entries

H:\fFORMS\Quality Assurance\approved QA\NCRWO RevE

Work Order ID 63086

October 20, 2010 3:10:13 PM

Item ID: D3891-042 **Accept** **Setup Start**

Revision ID: **Stop**

Item Name: Panel, Fwd RH

Start Date: 10/20/10 **Start Qty:** 2.00 **Cust Item ID:**

Required Date: 10/21/10 **Req'd Qty:** 2.00 **Customer:**

Reference:

Run Start

Approvals: **Process Plan:** _____ **Date:** _____ **Tooling:** _____ **Date:** _____

Stop

QC: _____ **Date:** _____ **SPC (Y/N):** _____ **Date:** _____

Sequence ID/ Work Center ID	Operation Description	Set Up/ Run Hours	Tool ID	Tool #	Plan Code	Accept Qty	Reject Qty	Reject Number	Insp. Stamp
180	QC21- Final Inspection - Work Order Release	0.00							10/10/21
QC	Memo	0.00							MF 10-10-21
Quality Control									

Dart Aerospace Ltd

W/O:		WORK ORDER CHANGES					
DATE	STEP	PROCEDURE CHANGE	By	Date	Qty	Approval Chief Eng / Prod Mgr	Approval QC Inspector

Part No: _____ **PAR #:** _____ **Fault Category:** _____ **NCR:** Yes No **DQA:** _____ **Date:** _____

Resolution: _____ **Disposition:** _____ **QA: N/C Closed:** _____ **Date:** _____

NCR:		WORK ORDER NON-CONFORMANCE (NCR)						
DATE	STEP	Description of NC Section A	Corrective Action Section B			Verification Section C	Approval Chief Eng	Approval QC Inspector
			Initial Chief Eng	Action Description Chief Eng	Sign & Date			

NOTE: Date & initial all entries

H:\fFORMS\Quality Assurance\approved QA\NCRWO RevE

Picklist Print

October 20, 2010 3:10:11 PM

Work Order ID: 63086

Parent Item: D3891-042

Parent Item Name: Panel, Fwd RH

Start Date: 10/20/10 **Required Date:** 10/21/10

Start Qty: 2.00 **Required Qty:** 2.00

Comments: IPP RevA: New issue DD verified by:EC

Component Item ID/ Item Name	Replacement Item ID	Mfg/ Purch	Bin Item	Primary Location	Last Location	Route Seq ID	Unit of Measure	Qty on Hand	Qty per Kit	Total Qty	Qty Issued	Date Issued	Status
MLEXS.125-F60029-04		Purchased	No			100	sf	1,253.803	3.8097	8.020421			
GE PLASTICS LEXAN SHEET										B10-10-20			
				Location			**Loc Qty**		**Loc Code**				
				MAT			1253.8038						
					115261		1253.8038			115261			
D3891-4		Manufactured	No			140	Each	0.0000	1	2			
Gasket			B	63089						10/10/21			

Dart Aerospace Ltd

W/O:		WORK ORDER CHANGES					
DATE	STEP	PROCEDURE CHANGE	By	Date	Qty	Approval Chief Eng / Prod Mgr	Approval QC Inspector

Part No: _____ **PAR #:** _____ **Fault Category:** _____ **NCR:** Yes No **DQA:** _____ **Date:** _____

Resolution: _____ **Disposition:** _____ **QA: N/C Closed:** _____ **Date:** _____

NCR:		WORK ORDER NON-CONFORMANCE (NCR)						
DATE	STEP	Description of NC Section A	Corrective Action Section B			Verification Section C	Approval Chief Eng	Approval QC Inspector
			Initial Chief Eng	Action Description Chief Eng	Sign & Date			

NOTE: Date & initial all entries

H:\fFORMS\Quality Assurance\approved QA\NCRWO RevE

DART AEROSPACE LTD	Work Order:	63086
Description: Panel	Part Number:	D3891-2
Inspection Dwg: D3891 Rev: A		Page 1 of 1

FIRST ARTICLE INSPECTION CHECKLIST

[X] First Article [ ] Prototype

Drawing Dimension	Tolerance	Actual Dimension	Accept	Reject	Method of Inspection	Comments
21.6	+/-0.100	21.6	✓		T B02	
19.7	+/-0.100	19.7	✓		T	
2.53	+/-0.030	2.53	✓		T	
1.25	+/-0.030	1.257	✓		V	
11.70	+/-0.030	11.70	✓		T	
3.25	+/-0.030	3.257	✓		V	
3.63	+/-0.030	3.63	✓		T	
2.00	+/-0.030	2.00	✓		T	
17.7	+/-0.100	17.7	✓		T	
19.6	+/-0.100	19.5	✓		T	
21.4	+/-0.100	21.4	✓		T	
25.4	+/-0.100	25.375	✓		T	
0.125	+/-0.010	.131	✓		V B02	

Measured by:	JR	Audited by:		Prototype Approval:	N/A
Date:	10-10-20	Date:	10-16-21	Date:	N/A

Rev	Date	Change		Revised by	Approved
A	09.07.29	New Issue	P/O D3891-042	KJ	

PARTS LIST

ITEM	QTY -041	P/N	DESCRIPTION
1	X	D3891-041	PANEL, FWD LH
2	1	D3891-1	PANEL
3	1	D3891-3	GASKET
4	A/R	3M 1300	ADHESIVE

SHOP COPY
RETURN TO
ENGINEERING
UNCONTROLLED COPY
SUBJECT TO AMENDMENT
WITHOUT NOTICE
WORK ORDER
NO. 13089

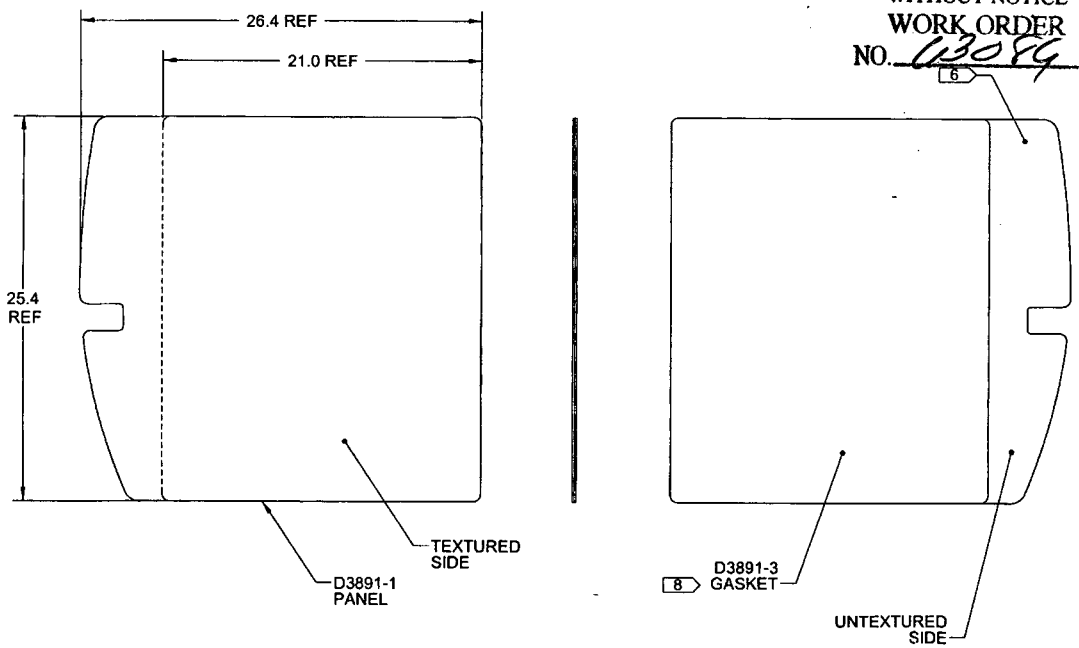

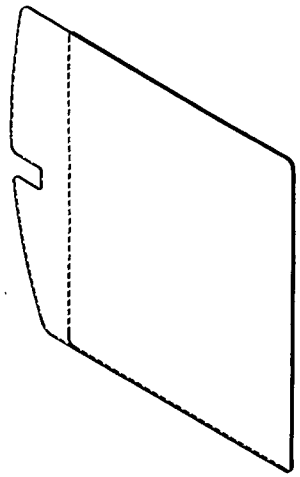

RELEASED

D3891-041 PANEL, FWD LH

NOTES:
1) MATERIAL: N/A
2) FINISH: NONE
3) TOLERANCES: PER DART QSI 018 UNLESS OTHERWISE NOTED
4) UNITS: INCHES UNLESS OTHERWISE NOTED
5) BREAK SHARP EDGES: NONE
6) IDENTIFICATION: IDENTIFY WITH DART P/N "D3891-041" AND B/N USING FINE POINT PERMANENT INK MARKER ON SMOOTH/UNTEXTURED SIDE OF PART
7) WEIGHT: 3.67 lbs
8) BOND GASKET TO SMOOTH/UNTEXTURED SIDE OF PART USING 3M 1300 ADHESIVE. TRIM GASKET TO EDGES OF PANEL, IF REQUIRED.

REV.	DESCRIPTION	BY	DATE
A	NEW ISSUE	CP	09.05.01

DESIGN	
DRAWN	
CHECKED	
MFG. APPR.	
APPROVED	
DE APPR.	
DATE	09.05.01

DART AEROSPACE LTD
HAWKESBURY, ONTARIO, CANADA

DRAWING NO. D3891 — REV. A — SHEET 1 OF 6
TITLE: PANEL, FWD — SCALE: NTS

PARTS LIST

ITEM	QTY -042	P/N	DESCRIPTION
1	X	D3891-042	PANEL, FWD RH
2	1	D3891-2	PANEL
3	1	D3691-4	GASKET
4	A/R	3M 1300	ADHESIVE

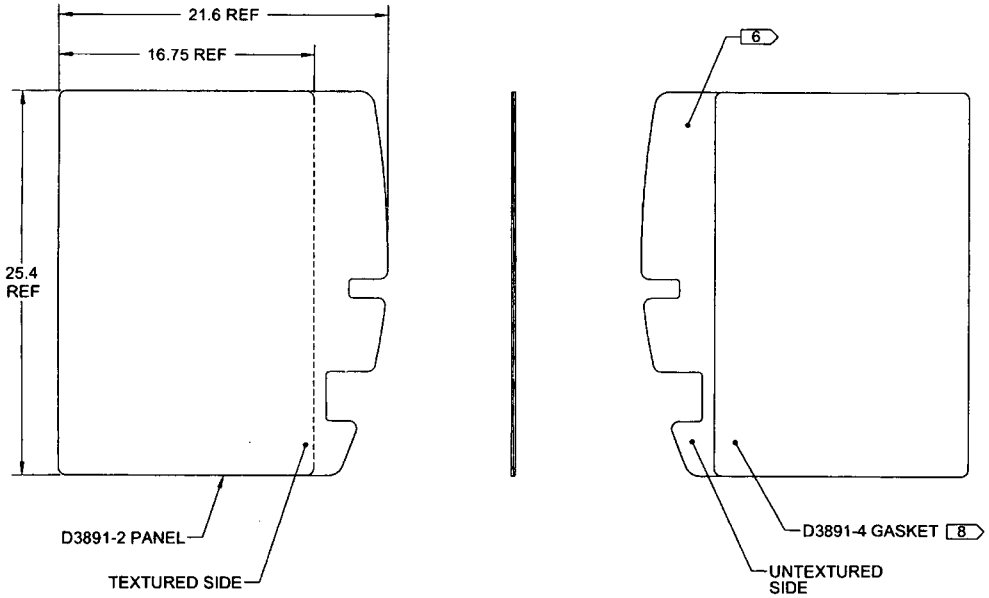

D3891-042 PANEL, FWD RH

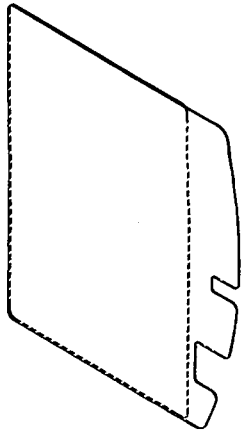

w/o 43086

RELEASED 09/05/11

NOTES:
1) MATERIAL: N/A
2) FINISH: NONE
3) TOLERANCES: PER DART QSI 018 UNLESS OTHERWISE NOTED
4) UNITS: INCHES UNLESS OTHERWISE NOTED
5) BREAK SHARP EDGES: NONE
6) IDENTIFICATION: IDENTIFY WITH DART P/N "D3891-042" AND B/N USING FINE POINT PERMANENT INK MARKER ON SMOOTH/UNTEXTURED SIDE OF PART
7) WEIGHT: 2.93 lbs
8) BOND GASKET TO SMOOTH/UNTEXTURED SIDE OF PART USING 3M 1300 ADHESIVE. TRIM GASKET TO EDGES OF PANEL, IF REQUIRED.

DESIGN		DART AEROSPACE LTD HAWKESBURY, ONTARIO, CANADA
DRAWN		
CHECKED		DRAWING NO. D3891 — REV. A — SHEET 2 OF 6
MFG. APPR.		
APPROVED		TITLE: PANEL, FWD — SCALE: NTS
DE APPR.		
DATE	09.05.01	

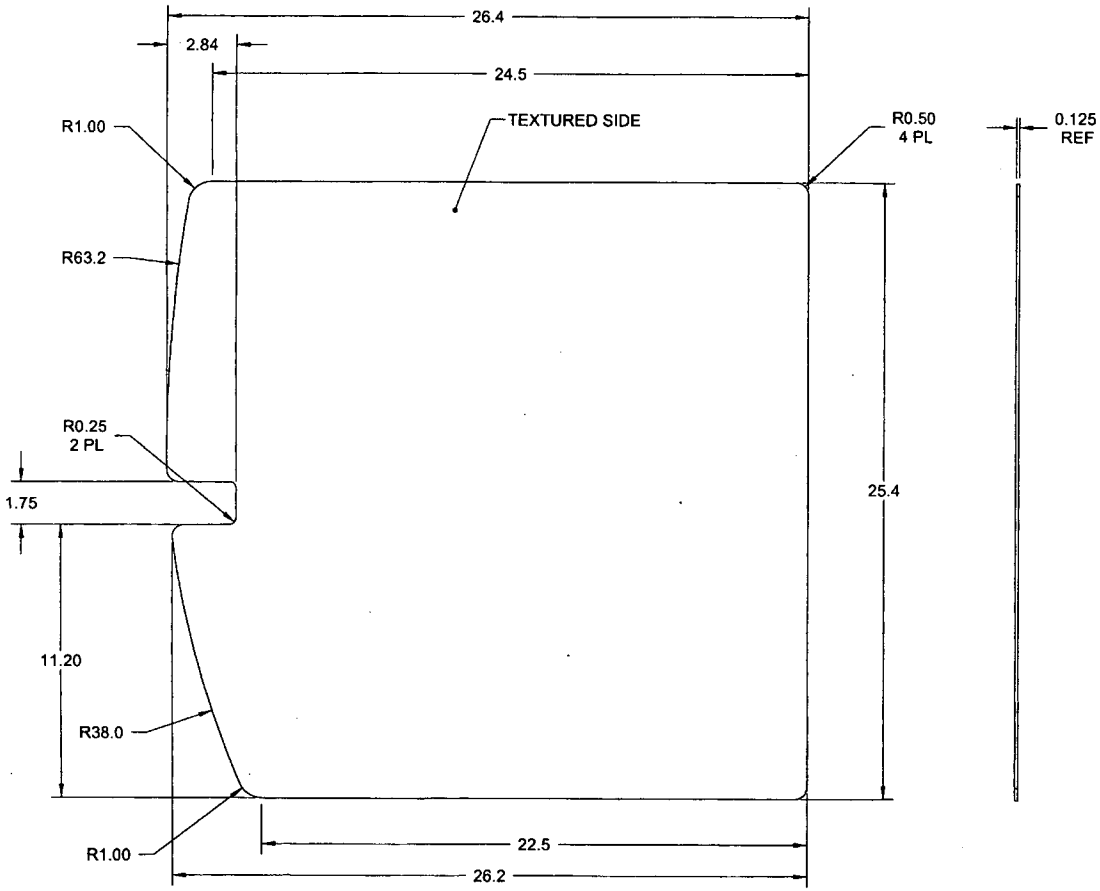

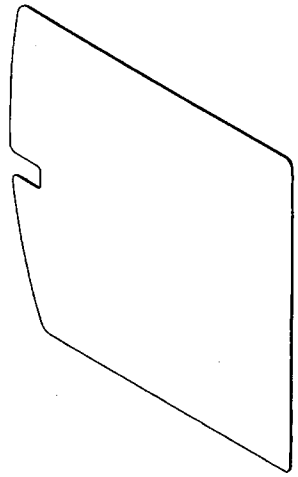

w/o 63084

RELEASED 07/06/16

D3891-1 PANEL

NOTES:
1) MATERIAL: F60029 GY3778 LEXAN SHEET (HEAVY HAIRCELL TEXTURE, DARK GREY), 0.125 THICK, TEXTURED SIDE UP (REF DART SPEC. MLEXS.125-F60029-04)
2) FINISH: NONE
3) TOLERANCES: PER DART QSI 018 UNLESS OTHERWISE NOTED
4) UNITS: INCHES UNLESS OTHERWISE NOTED
5) BREAK SHARP EDGES: 0.005 TO 0.010 MAX
6) IDENTIFICATION: NONE
7) WEIGHT: 3.46 lbs

DESIGN		DART AEROSPACE LTD HAWKESBURY, ONTARIO, CANADA
DRAWN		
CHECKED		DRAWING NO. D3891 — REV. A — SHEET 3 OF 6
MFG. APPR.		
APPROVED		TITLE: PANEL, FWD — SCALE: NTS
DE APPR.		
DATE	09.05.01	

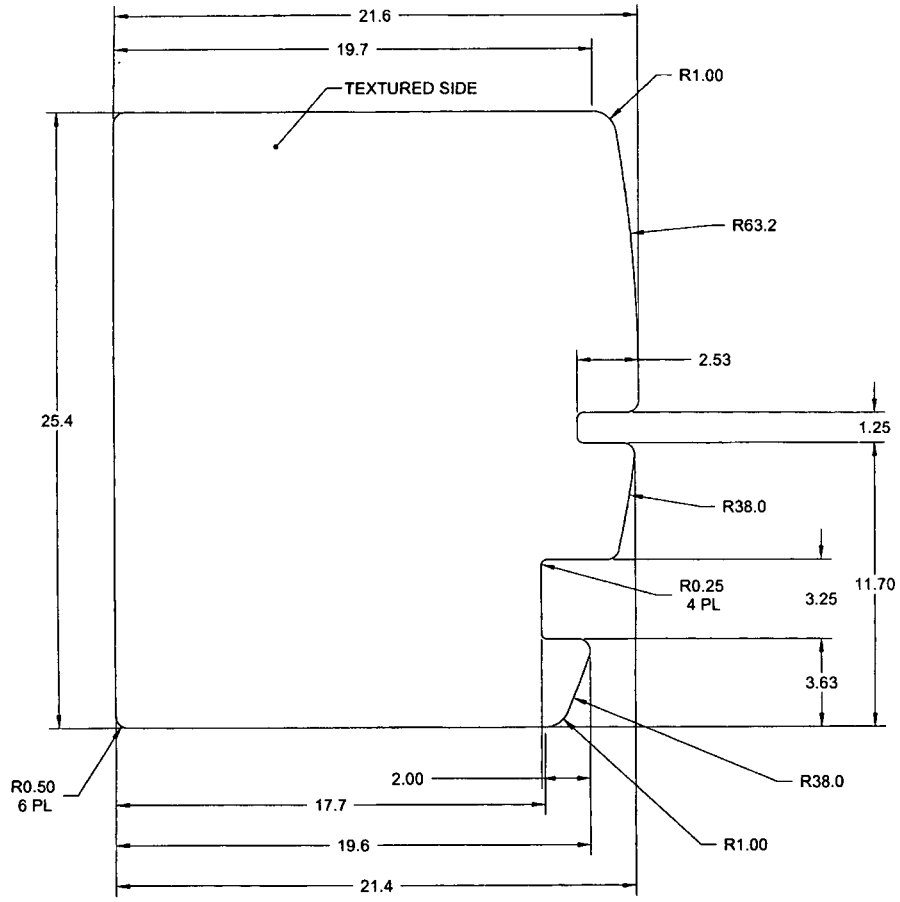

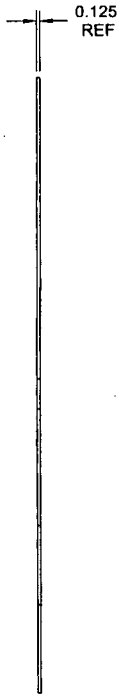

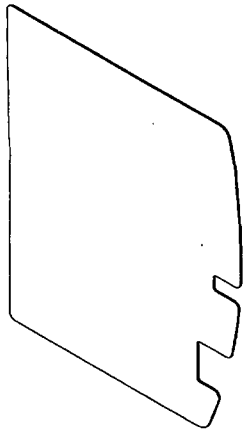

w6 43084

RELEASED
09/06/16

D3891-2 PANEL

NOTES:
1) MATERIAL: F60029 GY3778 LEXAN SHEET (HEAVY HAIRCELL TEXTURE, DARK GREY), 0.125 THICK, TEXTURED SIDE UP (REF DART SPEC. MLEXS.125-F60029-04)
2) FINISH: NONE
3) TOLERANCES: PER DART QSI 018 UNLESS OTHERWISE NOTED
4) UNITS: INCHES UNLESS OTHERWISE NOTED
5) BREAK SHARP EDGES: 0.005 TO 0.010 MAX
6) IDENTIFICATION: NONE
7) WEIGHT: 2.77 lbs

DESIGN		**DART AEROSPACE LTD** HAWKESBURY, ONTARIO, CANADA
DRAWN		
CHECKED		DRAWING NO. D3891 — REV. A — SHEET 4 OF 6
MFG. APPR.		
APPROVED		TITLE PANEL, FWD — SCALE NTS
DE APPR.		
DATE 09.05.01		

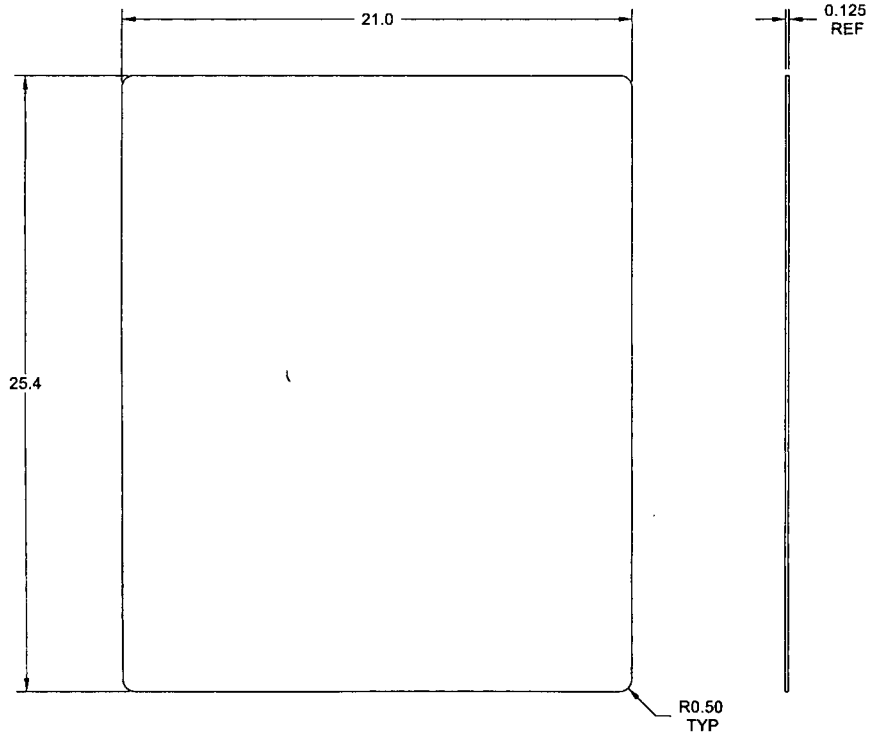

D3891-3 GASKET

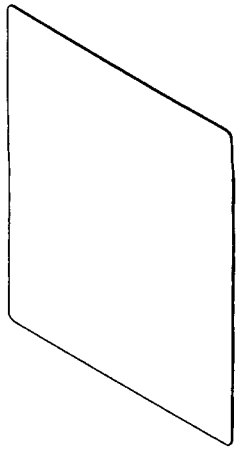

w/o 43089

RELEASED
09/06/16

NOTES:
1) MATERIAL: NEOPRENE FOAM SHEET, 0.125 THICK
(REF DART SPEC. M4111N-S.125)
2) FINISH: NONE
3) TOLERANCES: PER DART QSI 018 UNLESS OTHERWISE NOTED
4) UNITS: INCHES UNLESS OTHERWISE NOTED
5) BREAK SHARP EDGES: NONE
6) IDENTIFICATION: NONE
7) WEIGHT: 0.21 lbs

DESIGN		**DART AEROSPACE LTD** HAWKESBURY, ONTARIO, CANADA
DRAWN		
CHECKED		DRAWING NO. D3891 — REV. A — SHEET 5 OF 6
MFG. APPR.		
APPROVED		TITLE PANEL, FWD — SCALE NTS
DE APPR.		
DATE 09.05.01		

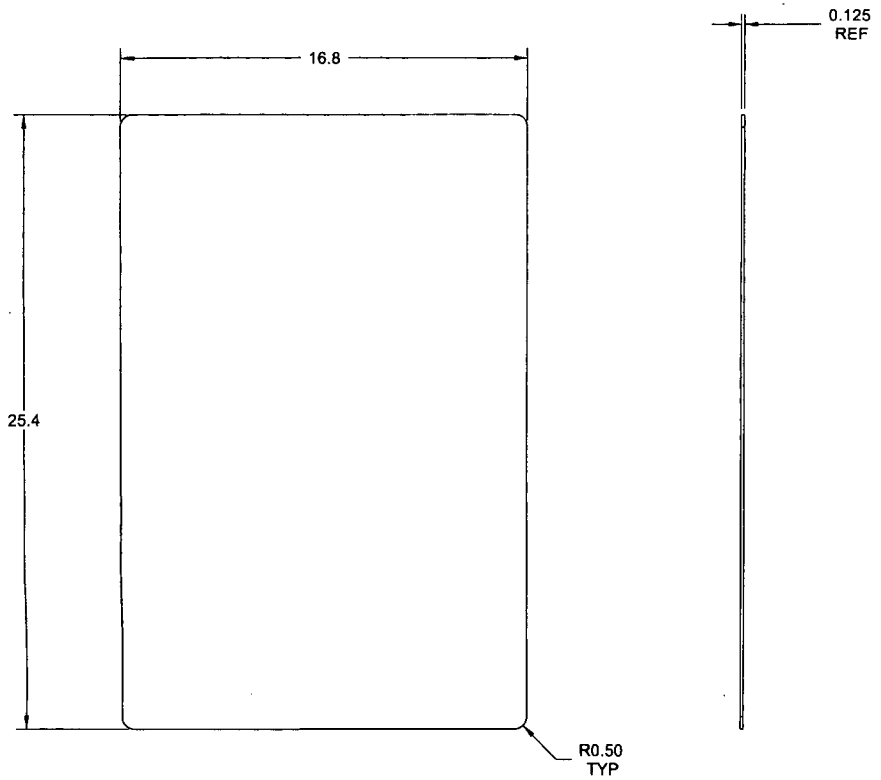

D3891-4 GASKET

w/ 63086

RELEASED 09/06/16

NOTES:
1) MATERIAL: NEOPRENE FOAM SHEET, 0.125 THICK
(REF DART SPEC. M4111N-S.125)
2) FINISH: NONE
3) TOLERANCES: PER DART QSI 018 UNLESS OTHERWISE NOTED
4) UNITS: INCHES UNLESS OTHERWISE NOTED
5) BREAK SHARP EDGES: NONE
6) IDENTIFICATION: NONE
7) WEIGHT: 0.17 lbs

DESIGN		DART AEROSPACE LTD HAWKESBURY, ONTARIO, CANADA
DRAWN		
CHECKED		DRAWING NO. D3891 — REV. A — SHEET 6 OF 6
MFG. APPR.		
APPROVED		TITLE: PANEL, FWD — SCALE: NTS
DE APPR.		
DATE 09.05.01		